Blaster

ADVANTAGE

Desktop bar code printer

User's Guide

Axiohm™
Cognitive Solutions

CSIPN:10-00-0219
REV. C
December 20, 1997

Barcode Blaster Advantage printers are manufactured by

Cognitive Solutions, a division of Axiohm transaction Solutions, Inc.

3003 Rollie Gates Drive • Paso Robles, CA 93446

TEL: (805) 237-6400 • FAX: (805) 237-6416

Copyright © 1997 by Axiohm, Inc.

Barcode Blaster™ and Advantage™ are trademarks of Axiohm, Inc. Microsoft® and Windows™ are trademarks of Microsoft Corporation. Other product and corporate names used in this publication may be trademarks or registered trademarks of other companies, and are used only for explanation and to their owner's benefit, without intent to infringe.

All information in this manual is subject to change without notice, and does not represent a commitment on the part of Axiohm, Inc. No part of this manual may be reproduced for any purpose or in any form, including electronic storage and retrieval, without the express permission of Axiohm, Inc. All program listings in this manual are copyrighted and are the property of Axiohm, Inc., and are provided without warranty.

FCC Notice

This equipment has been tested and been found to comply with the limits for a Class A digital device, pursuant to Part 15 of the FCC Rules. These limits are designed to provide reasonable protection against harmful interference when the equipment is operated in a commercial environment. This equipment generates, uses, and can radiate radio frequency energy and, if not installed and used in accordance with the instruction manual, may cause harmful interference to radio communications. Operation of this equipment in a residential area is likely to cause harmful interference in which case the user will be required to correct the interference at his own expense.

CE Notice

Warning

This is a Class A product. In a domestic environment this product may cause radio interference in which case the user may be required to take adequate measures.

Note:

This manual does not contain printer programming information. A disk containing the Cognitive Intellidriver™, a Windows driver for Cognitive Solutions printers, is shipped with every Blaster Advantage printer. The Intellidriver lets you print labels directly from your favorite Windows applications, without programming.

For those who do want to control their printer directly, a file called PROGGDE.HLP on the disk contains printer programming information in Windows Help format. You can load and read this file using WINHELP.EXE provided with Microsoft Windows 3.1 or above. Please refer to your Windows documentation if you do not know how to do this.

If you need programming information and are not using Windows (or cannot read the Help file for any other reason), contact our Technical Support Services Organization for assistance. Contact information is on page 15.

Contents

PRINTER SPECIFICATIONS 2

PRINTER COMMUNICATIONS 3
- Standard printer cables 3
- Serial port communication parameters 3

CONTROLS, INDICATORS, AND CONNECTIONS 5

PRINTER SETUP 5
- Printer power connection 5
- Loading labels or tags 6
- Loading thermal transfer ribbon 6
- Selecting the print mode and index method 8

PRINTER OPERATION 9
- Printing a self-test label 9
- Feeding blank labels 9
- Sending data to the printer 9
- Printing labels 10
- Controlling the printer using direct commands 10

PRINTER MAINTENANCE 11

PROBLEMS? 12
- Printer POWER indicator is not lit 12
- Printer READY light is not lit 12
- Printer READY light is red 13
- Printer will not print a self-test label 13
- Printer will not feed a label 13
- Host stops responding or displays “printer not ready” message 13
- Printer feeds labels continuously 13
- Print quality is poor 14
- Ethernet link light is not illuminated 14

TECHNICAL SUPPORT 15

PRINTER SPECIFICATIONS

Model	**BD242003**	**BD422003**	**BT242003**	**BT422003**	**BT423002**
Print method[1]	DT	DT	DT+TT	DT+TT	DT+TT
Pitch (DPI)[2]	203/101	203/101	203/101	203/101	300/150
Max media width (inches/*mm*)	2.4 *61*	4.25 *108*	2.4 *61*	4.25 *108*	4.25 *108*
Min. media width (inches/*mm*)	1 *25*	2 *50*	1 *25*	2 *50*	2 *50*
Max print width (inches/*mm*)	2.2 *56*	4.1 *104*	2.2 *56*	4.1 *104*	4.1 *104*
Max print length (inches/*mm*)[3]	41 *1041*	22 *559*	41 *1041*	22 *559*	10 *254*
Print speed (IPS)[2]	3/2	3/2	3/2	3/2	2
Size (inches/*mm*) Height Width Depth	 6.1/*155* 4.7/*120* 9.4/*239*	 6.1/*155* 6.8/*173* 9.4/*239*	 6.1/*155* 5.0/*127* 9.4/*239*	 6.1/*155* 6.8/*173* 9.4/*239*	 6.1/*155* 6.8/*173* 9.4/*239*
Weight (lbs./*kg*)[4]	3.1/*1.40*	3.9/*1.77*	4.0/*1.81*	4.5/*2.04*	4.5/*2.04*

Common Specifications

Installed RAM: 512 kB

Communications: RS232 serial and/or Centronics parallel and/or Ethernet interface

Max. media roll diameter: 4.7” *119mm*

Indexing methods: Black bar, Gap

Min. form length: 0.25” *6.35mm*

Min. label repeat distance: 0.375” *9.5mm*

Text fonts: 3X5, 5X7, 8X8, 9X12, 12X16, 18X23, 24X31, UltraFont A and B, CGI Triumvirate in 7 sizes

Text rotation: 0°, 90°, 180°, 270°

Graphics: PCX, BMP file support plus CSI raster format

Bar codes: UPCA/E/E1, ADD2/5, EAN8/13/128, Code39, I2OF5, Code128A/B/C, CODABAR, Plessey, MSI, MSI1, Code93, POSTNET, MaxiCode

Bar code rotation: 0° and 90° clockwise

Power: AC power transformer (supplied), output 19.6 VAC. Specify 120 or 230 VAC input when ordering

Environmental: 5° to 40° C operating
-20° to 50° C storage
25 to 85% non-condensing relative humidity

Notes:
1. DT = Direct Thermal, TT = Thermal Transfer.
2. Print pitch and speed values shown are software selectable.
3. Maximum print length is at maximum width and pitch, default memory settings, standard RAM, minimum stored objects.
4. Specified weight is without media.

PRINTER COMMUNICATIONS

Advantage printers may be equipped with Centronics parallel, RS232 serial, and/or Ethernet communication ports, wired as shown below.

Serial input connector (DB9S)

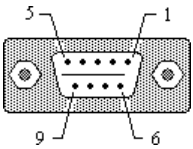

Pin #	Description
2	RXD (printer data input)
3	TXD (printer data output)
5	Ground (-)
7	RTS (printer busy)
8	CTS

Parallel input connector (Centronics 36 pin)

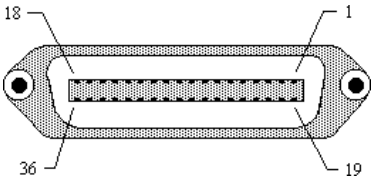

Pin #	Description
1	Strobe
2 - 9	Data bits 0 - 7
10	Acknowledge
11	Busy
12	Out of paper
13	+5VDC
17	Chassis ground
31	Reset
32	+5VDC
16, 33, 19-30	Signal ground

Standard printer cables

The following standard cables available for Advantage printers:

Centronics parallel cable: Order CSI P/N 61-00-0002
RS-232 cable, DB9 to DB9: Order CSI P/N 90-88-0079
RS-232 cable, DB9 to DB25: Order CSI P/N 90-88-0078

Serial port communication parameters

Advantage printers are configured as DTE equipment, and use RTS/CTS handshaking or XON/XOFF protocol (control characters are DC2 and DC4). The serial port supports the following parameters:

Speed: 600, 1200, 2400, 4800, 9600, 19200
Parity: Odd, Even, or None
Word length: 7 or 8 bits
Stop bits: 1 or 2 bits
Default parameters: 9600 baud, no parity, 8 data bits, 1 stop bit

Note:
Solus printers require a “null modem” when connected to another DTE device (i.e., a personal computer). CSI serial cables are wired in a null modem configuration. Other cables may require an external null modem adapter.

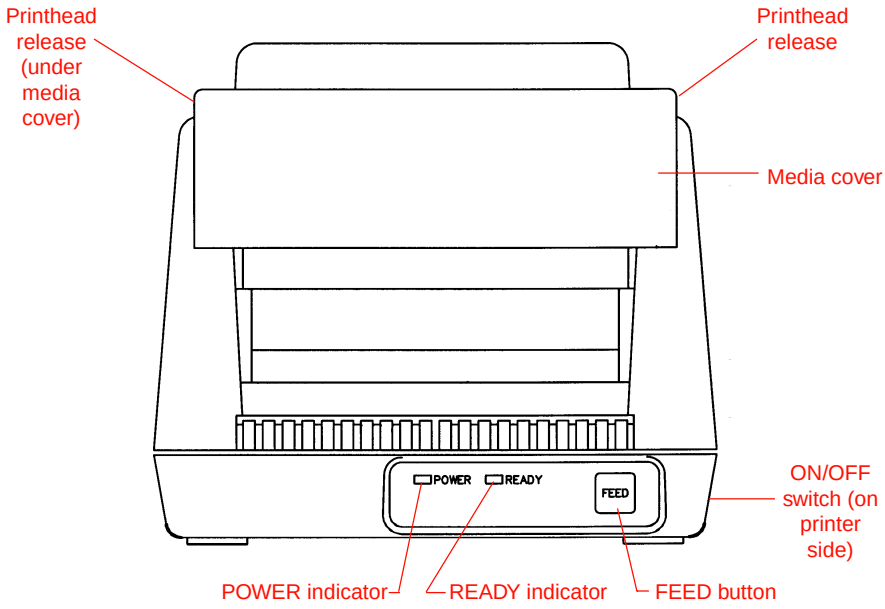

Note:
These figures show the 4.25" TT printer. Other models are similar.

Figure 1. Printer front view

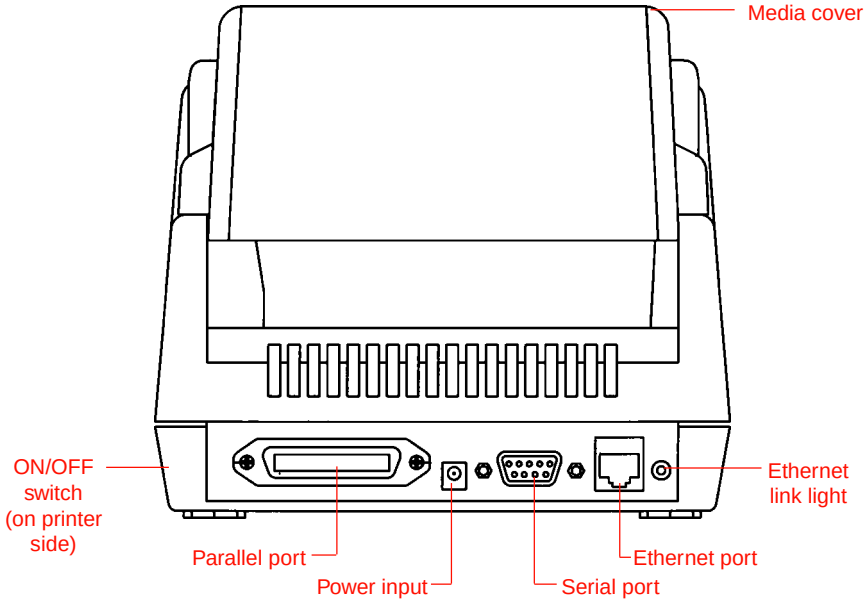

Figure 2. Printer rear view

CONTROLS, INDICATORS, AND CONNECTIONS

Device name	Primary function	Use
ON/OFF switch	Controls printer power	ON - for normal operation OFF - for storage
FEED button	Advances print media	PRESS - to advance media PRESS and HOLD while turning printer ON - to print test label PRESS to pause printing during batch mode operation
POWER indicator	Glows when printer power is ON	OFF - printer power off GREEN - printer power on
READY indicator	Shows printer status	GREEN - Printer ready for data OFF - Printer busy, or turned off RED - Printer error, or paused during batch mode operation
Ethernet Link light	Shows Ethernet status	ON - Ethernet link established OFF - No link, or printer turned off
Power input	Connects to power supply	Connect to transformer provided with printer
Serial port	Data input	DB9 female connector for connection to host controller, RS-232 protocol
Parallel port	Data input	Centronics compatible connector for connection to host controller
Ethernet port	Data input	RJ45 connector for Ethernet connection to host computer
Printhead release	Unlocks printhead	Push toward rear of printer to release printhead
Media cover	Protects print media	Lift to open Squeeze at hinge and lift to remove

PRINTER SETUP

Printer power connection

1. Plug the output of the AC power supply provided with the printer into the circular connector on the printer rear panel.
2. Plug the supply into an AC outlet having the proper voltage.

> ***Important!***
> The required AC voltage is marked on the power supply. Confirm that your AC voltage matches the power supply requirements. Do not use any power supply other than the one provided with the printer.

Loading labels or tags

1. Lift open or remove the printer media cover.
2. Press the two printhead releases back to unlock the printhead, then lift the printhead until it is fully raised.
3. Lift out the paper spindle.
4. Remove any print media or empty label core from the printer.

> ***Note:***
> This is a good time to clean the printhead. See page 11 for printhead cleaning instructions.

5. Unwrap the new media, and unwind a few labels from the roll.
6. Insert the paper spindle in the media roll so that the paper guide's flat side faces the media right side and the media unwinds from the bottom of the roll toward the front of the printer. *The label imaging surface must face up as it passes under the printhead.*
7. Adjust the paper guide as required to allow room for the media.
8. While lowering the media roll into the paper tray, slip the free end of the media under the printhead.
9. Adjust the paper guide until the media is snug between the paper guide and the left side of the paper tray.
10. Lower the printhead and press it down firmly until it locks closed.
11. (Optional) close the media cover.
12. Confirm that the printer is turned ON. Press the FEED button to feed a label or to resume printing.

Loading thermal transfer ribbon

Thermal transfer printers must have a ribbon installed when printing thermal transfer labels or tags. Load ribbon as follows (see Figure 4):

1. Lift open or remove the printer media cover.
2. Unlock and raise the printhead as for loading labels or tags (step 2 in the previous section).
3. Two arms hold each ribbon core. The right arms can flex outward. Remove the old ribbon cores by pressing each flexible arm outward until the cores clear the support arms.

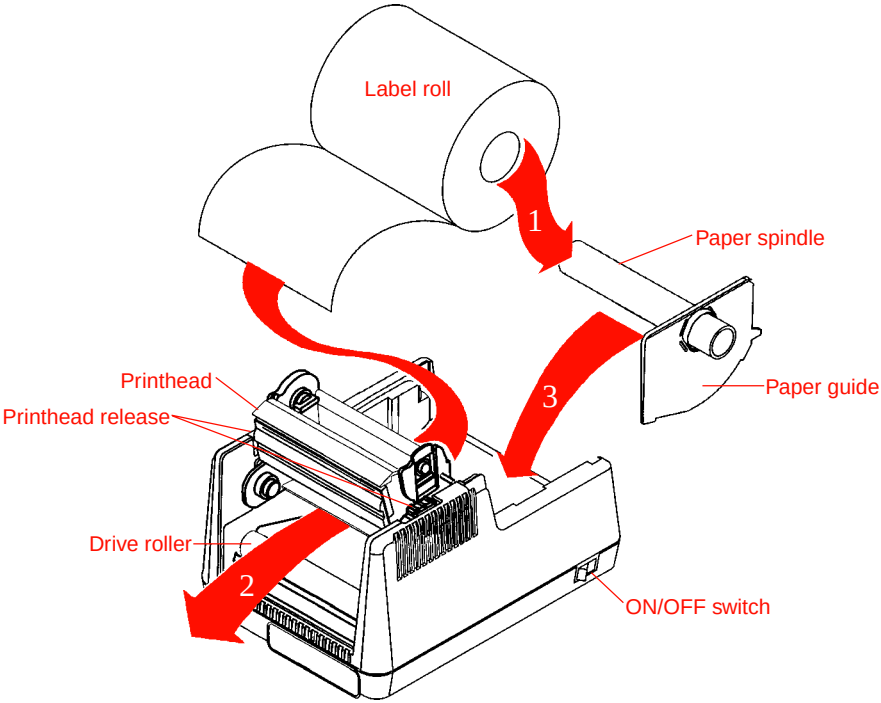

Figure 3. Loading labels

Note: printer is shown with media cover removed, for clarity.

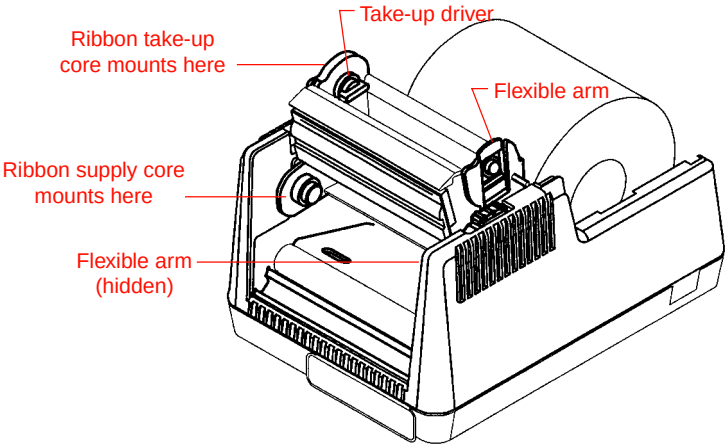

Figure 4. Thermal transfer mechanism

> **Note:**
> This is a good time to clean the printhead. See page 11 for printhead cleaning instructions.

4. Unwrap the new ribbon. Unwind a few inches of ribbon from the ribbon supply roll. Do not detach the empty ribbon take-up core.
5. The ribbon supply roll (the full roll) mounts in the bottom core holder. The take-up core mounts in the top core holder. The slotted end of the take-up core mates with the take-up driver on the left side of the thermal transfer mechanism.
6. Press the flexible arm on the bottom core holder outward and snap the ribbon supply core into place. Press the support arms inward to firmly seat the supply core.
7. Turn the ribbon take-up core until its slotted end aligns correctly with the take-up driver, then press the core onto the driver.
8. Press the right end of the top core holder outward and snap the ribbon take-up core into place. Press the support arms inward to firmly seat the take-up core.
9. Confirm that the printer is turned ON. Press the FEED button to confirm that the ribbon feeds smoothly and does not roll off to the left or right. If the ribbon moves toward one side, it may not be seated correctly. Remove the ribbon and carefully reinstall it.
10. Lower the printhead and press it down firmly until it locks closed.
11. Press the FEED button to index the first label.

> **Note:**
> Thermal transfer printers can operate in direct thermal or thermal transfer mode, and must be set for the correct print mode for best results.

Selecting the print mode and index method

Advantage printers can use black bar or gap indexing. Thermal transfer printers can print in thermal transfer or direct thermal mode. The printer must be set up for the proper print mode and index method. If you are using label printing software, it should provide a means to set up these parameters. See your software documentation for details.

If you are writing your own software or controlling the printer using direct commands, you must use printer commands to set up the print mode and index method. Refer to the programming information provided in the PROGGDE.HLP file for further information.

Printing a self-test label

Printing a self-test label checks the printer's overall operability. To run a self-test, confirm that the printer is loaded, connected to AC power, and turned OFF. Then:

1. Press and hold in the FEED button.
2. Turn the printer ON.
3. The printer should begin printing after a second or two. Release the FEED button after printing starts.
4. After the self-test label finishes printing, turn the printer OFF, wait a few seconds, then turn the printer back ON again.

> ***Important!***
> The printer will be in hex dump mode after printing the self-test label. It cannot print normal labels in hex dump mode. The printer will return to normal operation after you turn it off and on once.

Feeding blank labels

To feed labels:

1. Confirm that the printer is ON.
2. Press and release the FEED button to feed a label. Press and hold in the FEED button to feed multiple labels.

Sending data to the printer

To print labels using data sent from a host computer or terminal:

1. Connect the host and printer serial, parallel, or Ethernet ports together using a correctly wired interface cable (see page 3 for wiring information).
2. If you are using the serial port, confirm that the host and printer are using the same communications parameters.

   If you are using the Ethernet port, confirm that the Ethernet link light is illuminated.
3. Confirm that the printer is ON.
4. Send your data to the printer.

Printing labels

To print labels, the host computer sends commands to the printer via the serial or parallel communications port.

If you use a label printing software package, the computer and software control the entire printing process. You only need to set up the printer, start your label printing program, and follow its instructions. Contact the software supplier or manufacturer if you encounter difficulties when using commercial software.

Controlling the printer using direct commands

You can also produce labels by sending commands directly to the printer. Simple ASCII commands control the printer. You can write command files using any word processor that can output ASCII text.

Since printer programming is potentially complex, programming information is not provided here. A printer command reference and basic programming procedures are provided on the floppy disk packed with the printer. The file PROGGDE.HLP on the disk is a Microsoft Windows Help file, readable using WINHELP.EXE provided with Microsoft Windows 3.1 or above.

If you need programming information and are not using Windows (or cannot read the Help file for any other reason), contact our Technical Support Services Organization for assistance (please see page 15 for contact information).

PRINTER MAINTENANCE

Cognitive Solutions printers need very little maintenance other than occasional cleaning. Clean the printer body as required, using a soft cloth moistened with a mild detergent cleaner.

We recommend cleaning the printhead when loading print media. Printhead cleaning is easy and fast:

1. Unlock and raise the printhead if it is not already raised.

2. If you are cleaning a thermal transfer printer with a ribbon installed, remove the ribbon take-up core and lay it in front of the printer.

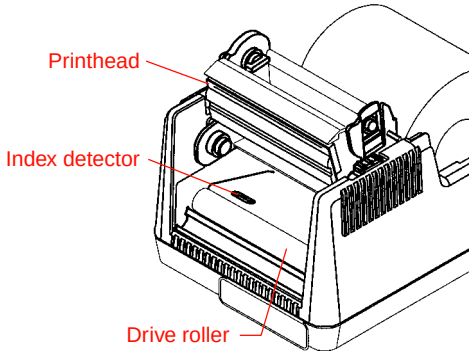

Figure 5. Printer opened for cleaning

3. Using a soft cloth moistened with 98% or 99% pure isopropyl or denatured alcohol, clean all dirt and label residue from the printhead, paying particular attention to the “burn line” (this is the thin black line near the front edge of the printhead).

> ***Caution!***
> Do not clean the printhead or drive roller using abrasive or metallic objects, or ammonia-based cleaners or other harsh chemicals. These practices can cause serious damage.

4. If you removed the thermal transfer ribbon take-up core, reinstall it now.

5. Wipe the drive roller with the cleaning cloth. To reach all portions of the drive roller, confirm that the printer is ON. Press the FEED button, then clean the drive roller as it turns.

> ***Caution!***
> Take care that the cleaning cloth does not become entangled with the ribbon mechanism or drive roller during this process.

6. Confirm that the index detector is unobstructed.

7. Resume the media loading procedure, or if there is already media in the printer, lower and lock the printhead.

8. Confirm that the printer is ON and resume normal operation.

PROBLEMS?

Cognitive printers are very reliable, so printing problems are unlikely. If you do think you have a printer problem, proceed as follows:

1. Confirm that the printer has the right media installed, and that it is loaded correctly. See page 6 for media loading instructions.
2. Confirm that the printer is connected to its power supply and the supply is plugged into an AC outlet having the proper voltage.
3. Open the printhead and inspect the media path. Remove any obstructions, and clean the printhead and drive roller according to the instructions on page 11.
4. Press down firmly on the printhead to confirm that it is closed.
5. Confirm that the printer is turned ON and that the POWER and READY indicators are both glowing green.
6. Print a self-test label as described on page 9.
7. Press FEED to confirm that the printer will feed a label.
8. Review the common problems described in the following section.
9. If these steps do not correct the problem, contact your Cognitive Solutions dealer or our Technical Services Department. You will find Technical support contact information on page 15.

> ***Note:***
> The information here assumes you are using label printing software. If you are programming the printer, please review the troubleshooting information in the PROGGDE.HLP file.

Common problems and their solutions

Printer POWER indicator is not lit

Double-check the AC source and the power supply connections. If this does not correct the problem, the power supply may have a blown fuse. Contact our Technical Services Department for assistance.

Printer READY light is not lit

Disconnect the cable between the printer and host, then turn the printer OFF and back ON. If the READY light remains dark, there may be a printer problem. If the READY light glows green with the host disconnected, suspect a host computer or cabling problem.

Printer READY light is red

1. Press the FEED switch to make certain that the printer is not paused during a batch operation.
2. Confirm that the print media is not exhausted.

Printer will not print a self-test label

1. If using a thermal transfer printer, confirm that the ribbon is loaded correctly. The ribbon dull side should face the drive roller.
2. If using a direct thermal printer, confirm that you have loaded direct thermal media.
3. Disconnect the cable between the printer and the host computer, turn the printer OFF, then try to print a self-test label again.

Printer will not feed a label

1. Confirm that the print media is loaded correctly.
2. Turn the printer OFF and back ON. Confirm that the printer LED indicators both glow green. Press the FEED button.
3. If the printer still does not feed, disconnect the communications cable and repeat step 2. If the printer feeds with the cable disconnected, suspect a problem with the host computer or cable.

Host stops responding or displays “printer not ready” message

1. Review your software setup, following the instructions provided with the software.
2. Confirm that the host-to-printer communication cable is connected and undamaged. If using the serial port, confirm that you are using a null modem cable or adapter.
3. If using the serial port, confirm that the host and printer are both using the same serial port parameters. The self-test label shows the current printer serial port parameters.
4. If using a communications switch between the host and printer, remove the switch and connect the printer directly to the host.
5. Turn the printer OFF, reset the host computer and software, turn the printer ON, and try printing again.

Printer feeds labels continuously

1. Check that the print media is loaded correctly.
2. Confirm that the index setting (black bar or gap) in your software setup matches your print media.

Print quality is poor

1. Confirm that the print media is properly loaded, and there is no side-to-side motion of the paper as it feeds through the printer.
2. Check your software's print darkness and print speed settings. These settings may need adjustment for optimum results.
3. Try different print media. Old or inferior quality media will degrade print quality.
4. If using a thermal transfer printer:

   A. Confirm that the ribbon is correctly loaded. Check that the ribbon cores are firmly seated on the support arms.

   B. Press and hold in the FEED button to feed several labels. Confirm that the ribbon is not wrinkling. Occasional wrinkling is normal, but frequent wrinkling may indicate a defective ribbon.

Ethernet link light is not illuminated

1. Confirm that the printer POWER indicator is glowing green.
2. Check the Ethernet cable and cable connections between the printer and the host computer.
3. Confirm that the host computer Ethernet interface is working. Consult your host computer documentation for further information.

TECHNICAL SUPPORT

Please contact your local dealer first for technical support. Your dealer is knowledgeable about Cognitive Solutions printers, printing software, and your unique system. If you still need technical assistance after contacting your dealer, call our Technical Support Services Department at (805) 227-7157, 7 AM to 5 PM Pacific Time, Monday through Friday, or FAX them at (805) 237-6417. Technical support is also available by modem at (805) 237-6429.

If you must return any products to the factory, first obtain a returned material authorization number (RMA) from our Technical Support Services Department. When calling, *please* have your printer model number and serial number handy.

Cognitive Solutions
3003 Rollie Gates Drive
Paso Robles, CA 93446 USA
TEL: (805) 237-6400 or (800) 525-2785
FAX: (805) 237-6416

Axiohm, plc.
Atlantic Street
Altrincham, Cheshire WA14 5QJ England
TEL: +44 (0) 161 929 9933
FAX: +44 (0) 161 927 7664

Axiohm Pty. Ltd.
Level 3, 39 Leighton Place
Hornsby NSW 2077 Australia
TEL: +61 2 477 1999
FAX: +61 2 477 1453